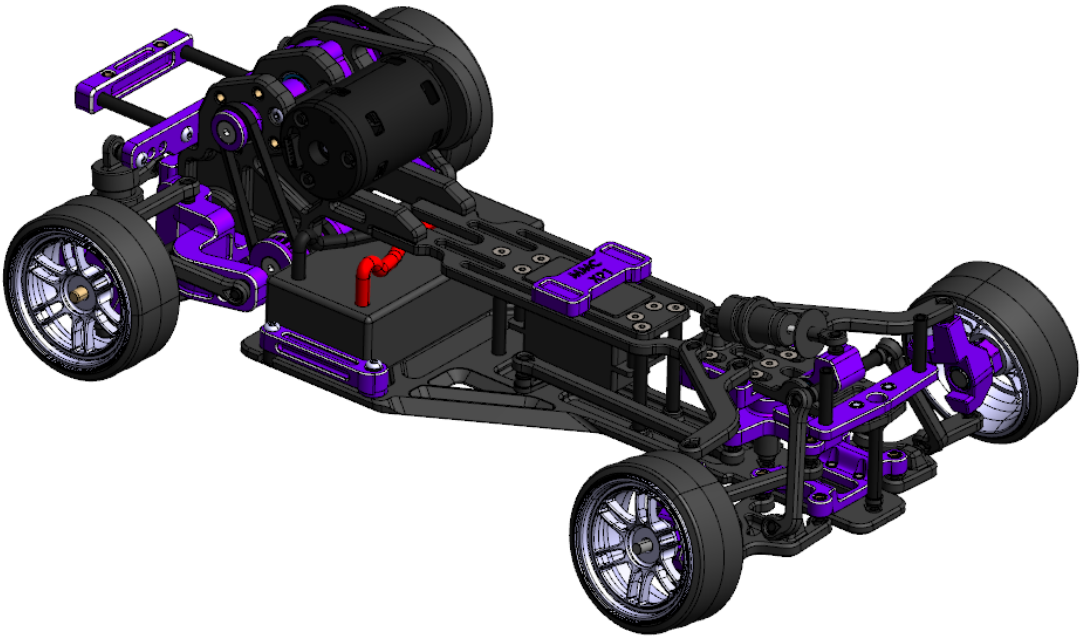

MMC XP1 DRIFT CHASSIS INSTRUCTION MANUAL

	MMC XP1 Drift Chassis manual		
	Version	Description	Author
	1.0	Doc. Creation	MMC
	1.1	Flexing System update	MMC

Table of contents

1 Summary and license terms 3
2 Bill OF Materials 4
3 Design annotations 7
3.1 Control arms lengths (As Reference) 7
3.1.1 Rear suspension 7
3.1.2 Front Suspension 8
3.1.3 Caster and Ackerman positions 9
4 3D of the chassis for assembly 10

1 Summary and license terms

This work is licensed under a private use license that describes as follows:

You are authorized to:

> *Print and use the 3D prints of the 3D model for private use, in unlimited quantity.*
>
> *Share the images of your 3D prints of the 3D model on communication media such as social networks or websites.*

What is not allowed:

> *No commercial use or public sharing of the 3D model.*
>
> *No modification or adaptation of the 3D model for public sharing or sale.*
>
> *No distribution, sale, donation or exchange of the digital files of the 3D model.*

2 Bill OF Materials

Bill Of Material: MMC XP1				
N	Quantity	Part Number	Nomenclature	Source
67	1	14T_PINION	Standard 14T pinion	SHOP
52	1	540_MOTOR	Standard 540 Size Motor	SHOP
5	46	BallJoint_4.8mm	4.8mm BallJoint (6mm thread) (See below recommendations)	SHOP
74	2	BallJoint_5,5mm_Nut	5,5mm BallJoint Nut (Included with Shocks)	SHOP
76	1	Battery	"Shorty" type battery	SHOP
48	9	BB-10X15X4	Ball Bearing - OD: 15mm, ID: 10mm, WIDTH: 4mm	SHOP
30	10	BB-5X9X3	Ball Bearing - OD: 9mm, ID: 5mm, WIDTH: 3mm	SHOP
55	1	Differential	Rhino C-LSD Differential/Yokomo Standard Differential	SHOP
71	1	HTD3MBELT_50T (diff)	50T HTD3M belt (3 or 4 mm)	SHOP
70	1	HTD3MBELT_50T (red.)	50T HTD3M belt (3 or 4 mm)	SHOP
69	1	HTD3MBELT_54T (motor)	54T HTD3M belt (3 or 4 mm)	SHOP
9	3	ISO10642 M3x10	CounterSunk ISO10642 M3x10 Screw	SHOP
1	23	ISO10642 M3x8	CounterSunk ISO10642 M3x8 Screw	SHOP
62	4	ISO10642 M4x10	ISO10642 M4x10 Countersunk screw	SHOP
31	2	ISO4026-M3x10	M3x10 hexagon socket set screw ISO4026	SHOP
16	10	ISO7380 M3x10	ButtonHead ISO7380 M3x10 Screw	SHOP
53	8	ISO7380 M3x12	ButtonHead ISO7380 M3x12 Screw	SHOP
54	4	ISO7380 M3x4	ButtonHead ISO7380 M3x4 Screw	SHOP
19	11	ISO7380 M3x6	ButtonHead ISO7380 M3x6 Screw	SHOP
25	2	ISO7380 M3x8	ButtonHead M3x8 screw	SHOP
64	1	LHN-45	Long Hex Nut M4 (45mm)	SHOP
58	1	LHN-60	Long Hex Nut M4 (60mm)	SHOP
17	6	RN-10	Round Nut M3 (10mm)	SHOP
12	4	RN-15	Round Nut M3 (15mm)	SHOP
11	4	RN-20	Round Nut M3 (20mm)	SHOP
8	2	RN-30	Round Nut M3 (30mm)	SHOP
23	5	RN-35	Round Nut M3 (35mm)	SHOP
44	4	RPF1_Wheel	26mm Wheel (Enkei RPF1 replica)	3DPRINT (COLOR)
13	1	Servo	Low Profile type Servo	SHOP
36	1	ServoHorn	Standard Servo Horn (Metal)	SHOP
33	3	Shock_Bottom	Shock Absorbers (Bottom Part)	SHOP
32	3	Shock_Top	Shock Absorber (Top Part)	SHOP
22	6	SPCR_2MM	2mm Spacer	3DPRINT (BLACK)
37	3	SPCR-3MM	3mm Spacer	3DPRINT (BLACK)
4	14	TI-4	Brass Threaded Insert (M3x4x4,5)	SHOP
3	69	TI-6	Brass Threaded Insert (M3x6x4,5)	SHOP
43	4	WHEEL_HEX	Wheel Hexagon	SHOP

7	1	XP1-001	Lower Deck	3DPRINT (BLACK)
2	1	XP1-002	Front Subframe	3DPRINT (COLOR)
6	1	XP1-003-1	Front LCA Left	3DPRINT (BLACK)
35	1	XP1-003-2	Front LCA Right	3DPRINT (BLACK)
10	1	XP1-004	Upper Deck	3DPRINT (BLACK)
27	1	XP1-005	Front UCA and Caster Adjustability Support	3DPRINT (COLOR)
28	2	XP1-006	Front UCA Right and Left	3DPRINT (BLACK)
29	1	XP1-007	Front Suspension Rocker Arm	3DPRINT (COLOR)
34	2	XP1-008	Front Fixed-lenght Push-rod	3DPRINT (BLACK)
38	1	XP1-009	Steering Lever Arm	3DPRINT (COLOR)
39	1	XP1-010	Steering Whiper	3DPRINT (COLOR)
40	1	XP1-011	Servo Fixed-lenght Actuator	3DPRINT (BLACK)
14	1	XP1-012	Steering Lower Spacer	3DPRINT (BLACK)
15	1	XP1-013	Steering Upper Spacer	3DPRINT (BLACK)
41	1	XP1-014-1	Front Knuckle Right	3DPRINT (COLOR)
45	1	XP1-014-2	Front Knuckle Left	3DPRINT (COLOR)
46	2	XP1-015	Fixed-length Steering Rods	3DPRINT (BLACK)
47	1	XP1-016-1	Rear Bulk-head Right	3DPRINT (BLACK)
49	1	XP1-016-2	Rear Bulk-head Left	3DPRINT (BLACK)
50	1	XP1-017	Motor Support Spacer	3DPRINT (COLOR)
51	1	XP1-018	Adjustable Motor Support	3DPRINT (BLACK)
56	1	XP1-019	38T Belt Conversion for Rhino C-LSD / YD2 Diff	3DPRINT (COLOR)
57	2	XP1-020	Diff Spacers	3DPRINT (COLOR)
59	1	XP1-021	14T Belt Pulley	3DPRINT (COLOR)
60	1	XP1-022	Main Shaft Cover	3DPRINT (COLOR)
61	1	XP1-023	38T Belt Pulley First Stage	3DPRINT (COLOR)
63	1	XP1-025	20T Belt Pulley	3DPRINT (COLOR)
65	1	XP1-026	Secondary Shaft End Cap	3DPRINT (COLOR)
66	1	XP1-028	14T Belt Pulley	3DPRINT (COLOR)
68	1	XP1-030	Press-fitted 14T Pinion to 14T Belt Pulley Adapter	3DPRINT (COLOR)
18	1	XP1-031-1	Battery Support Right	3DPRINT (COLOR)
20	1	XP1-031-2	Battery Support Left	3DPRINT (COLOR)
72	1	XP1-032	Rear Subframe	3DPRINT (COLOR)
77	1	XP1-033-1	Rear Knuckle Right	3DPRINT (COLOR)
81	1	XP1-033-2	Rear Knuckle Left	3DPRINT (COLOR)
78	1	XP1-034-1	Rear LCA Right	3DPRINT (BLACK)
82	1	XP1-034-2	Rear LCA Left	3DPRINT (BLACK)
73	1	XP1-035	Rear Suspension Support	3DPRINT (COLOR)
21	2	XP1-036	Front Suspension Spacer	3DPRINT (COLOR)
75	1	XP1-037	Rear Magnet Support	3DPRINT (COLOR)
83	2	XP1-038	Rear Active Toe Fixed-length Arm	3DPRINT (BLACK)
84	2	XP1-039	Rear Traction Fixed-length Arm	3DPRINT (BLACK)

85	2	XP1-040	Rear Camber Fixed-length Arm	3DPRINT (BLACK)
24	1	XP1-041	Body post front magnet support	3DPRINT (COLOR)
26	1	XP1-042	Flex plate	3DPRINT (COLOR)
80	2	YOKOMO_47MMAXLE_1	47mm Yokomo Rear Axle	SHOP
79	2	YOKOMO_47MMAXLE_2	Yokomo 47mm Rear Axle	SHOP
42	2	YOKOMO_FRONTAXLE	Yokomo Simple Front Axle	SHOP

* 55mm damper sets recommended for this chassis

** Turnbuckle lengths depend on what balljoint lengths are used. Check the standard arm lengths as reference.

Recommended Balljoints for this chassis:

https://es.aliexpress.com/item/1005008596966457.html?spm=a2g0o.productlist.main.9.7ac1KLZlKLZle4&algo_pvid=df2acd9c-be31-40ae-80bd-02a62adc3506&algo_exp_id=df2acd9c-be31-40ae-80bd-02a62adc3506-4&pdp_ext_f=%7B%22order%22%3A%2220%22%2C%22eval%22%3A%221%22%7D&pdp_npi=4%40dis%21EUR%212.54%212.04%21%21%212.81%212.26%21%4021039117f1745664911316347 9e6735%2112000004588558490 3%21sea%21ES%210%21ABX&curPageLogUid=GjX9LtpOsr9c&utparam-url=scene%3Asearch%7Cquery_from%3A

3 Design annotations

3.1 Control arms lengths (As Reference)

This chassis comes with printable control arms. All of them can be swapped for the conventional turnbuckles.

The idea behind this is to reduce costs and give the user a good starting point for the alignment.

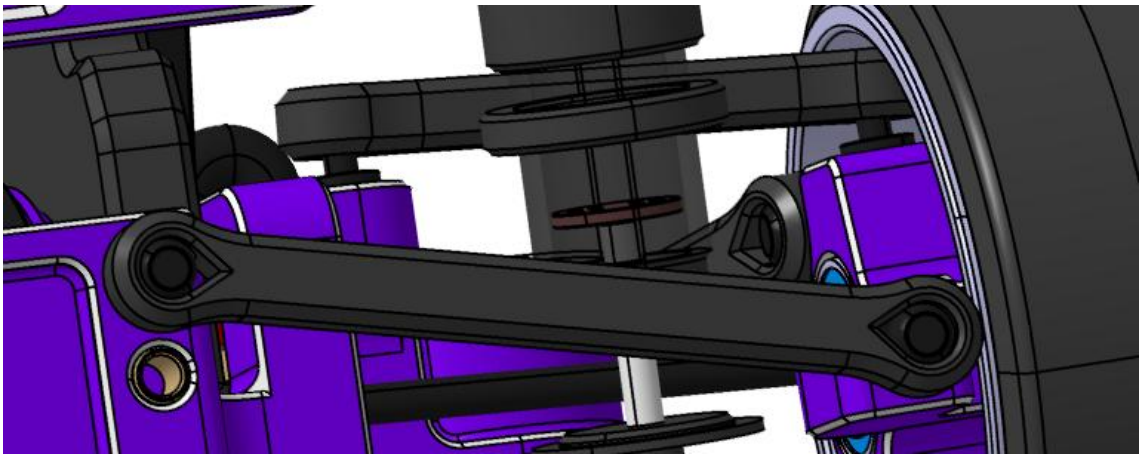

3.1.1 Rear suspension

The rear suspension is a multi-link type of suspension, it may be one of the most efficient suspension systems out there. The main advantage of this suspension is the infinite amount of adjustment when the fixed-length rods are swapped for turnbuckles.

Although the standard alignment already gives an incredible amount of grip!

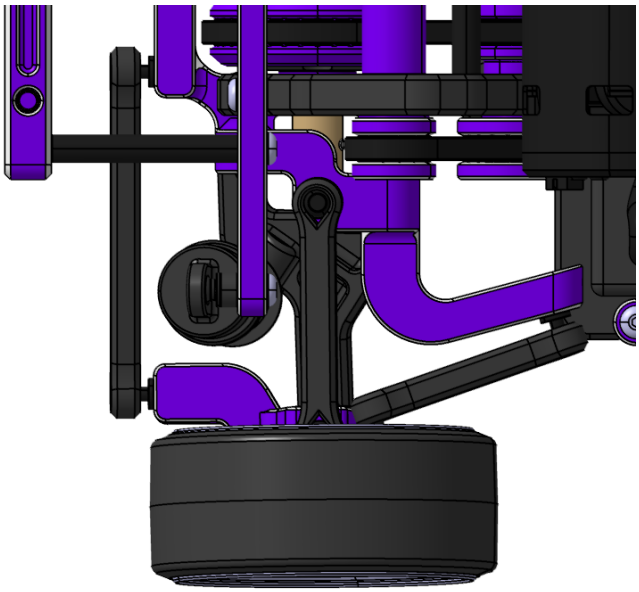

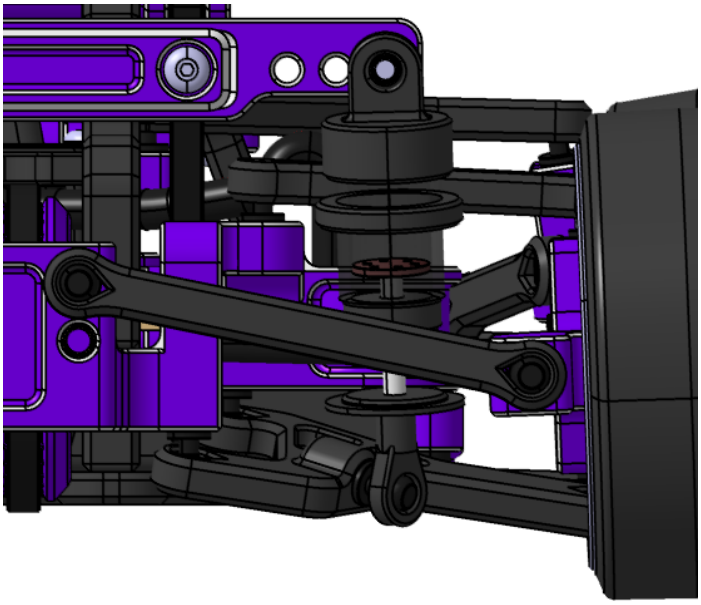

3.1.2 Front Suspension

The front suspension is a standard double wishbone setup. For the standard version, there's no adjustment in camber or track width. There are a few optional parts on the way to purchase.

The main feature of this suspension setup is the mono-shock design. This type of setup stiffens up the roll allowance of the front of the chassis, acting as a sway bar. It is translated to enhanced grip at the front. The more roll is allowed at the rear, the greater the front grip will be.

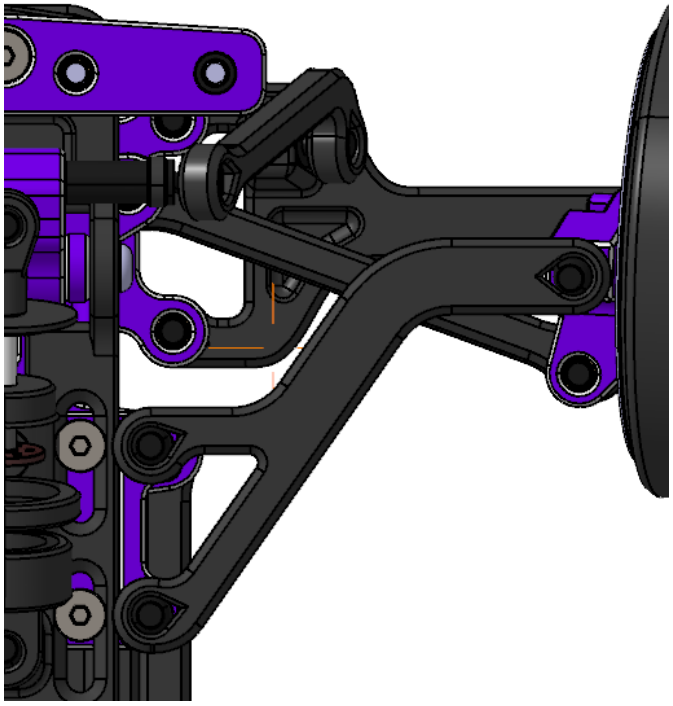

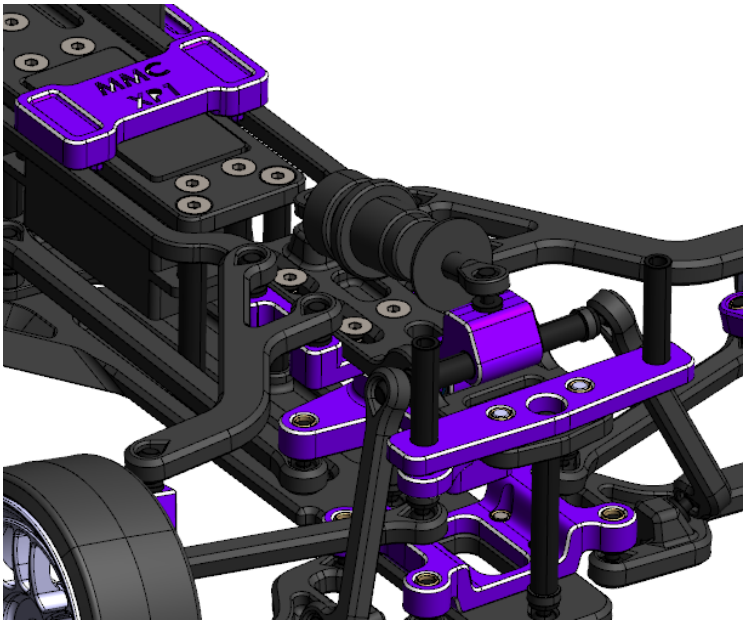

3.1.3 Caster and Ackerman positions

Reference configuration for caster:

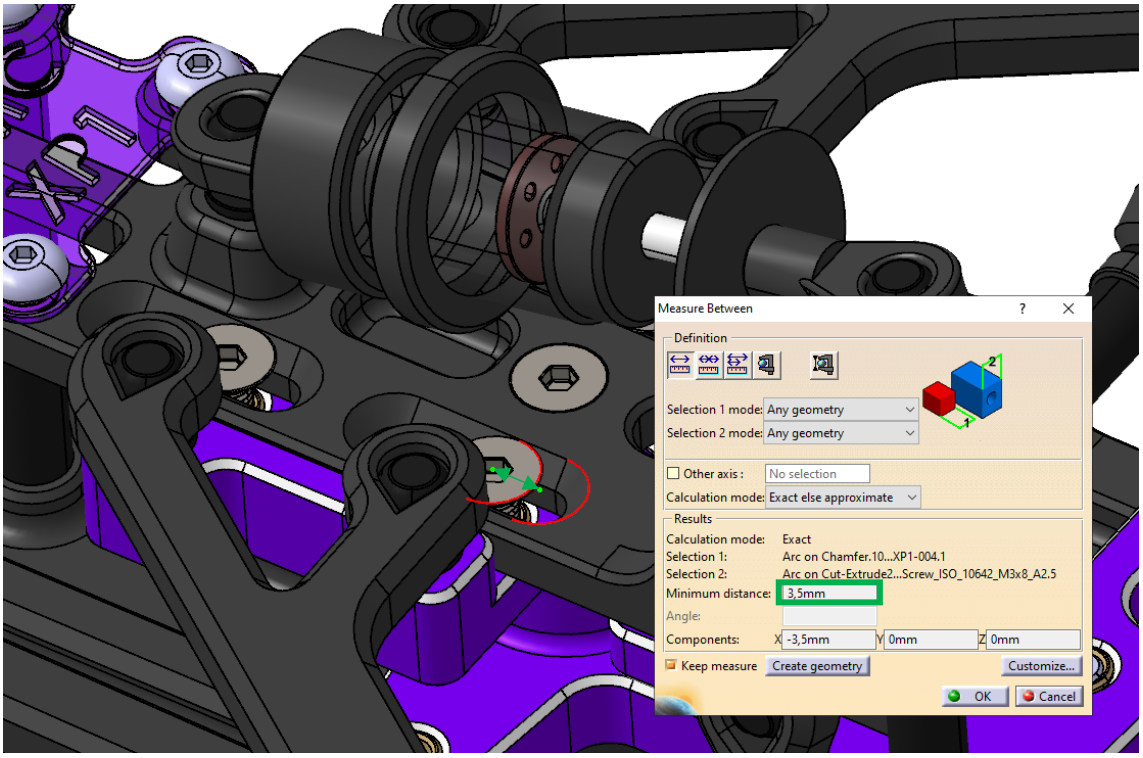

Reference position for Ackerman:

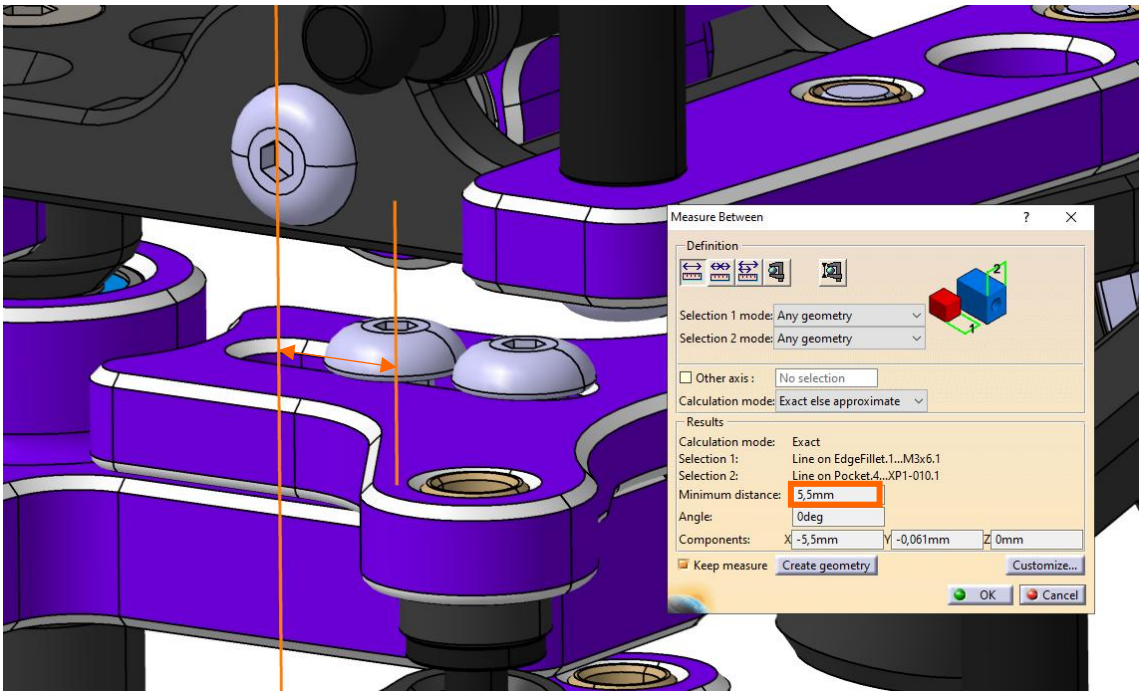

4 3D of the chassis for assembly

In the ZIP file there's a 3DPDF view to interact with and see the chassis assembly and it's components. Follow the instructions below:

1. When scrolling down the last page, it will appear as a blank page, but you will see that you can click on an option button with two options. Click on any of the options:

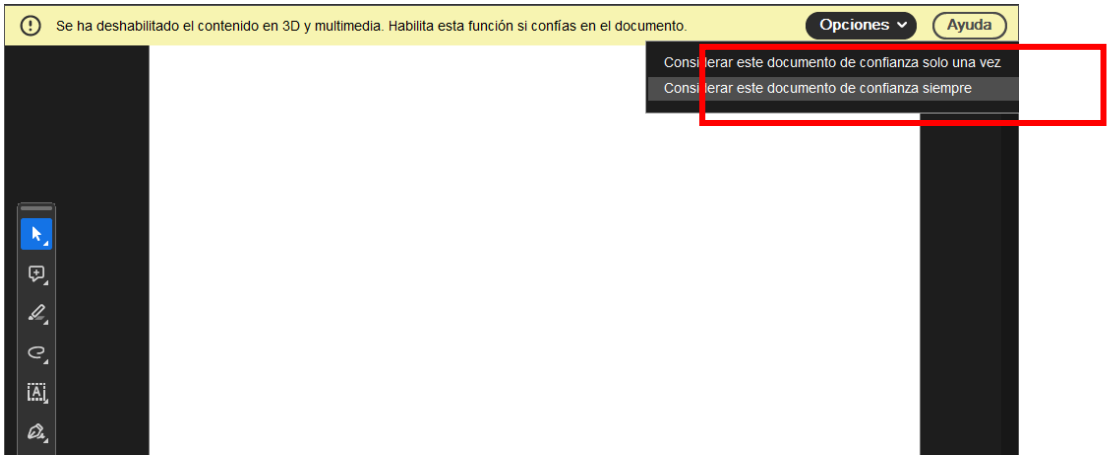

2. After this, click on the white page when the hand mouse icon appears, and the 3D viewer will load.

   If this doesn't work, do the following:

   - Go to preferences of your Adobe Acrobat application.
   - Go to 3D and multimedia elements
   - Enable 3D and multimedia playback
   - Close the Application and open again the file.

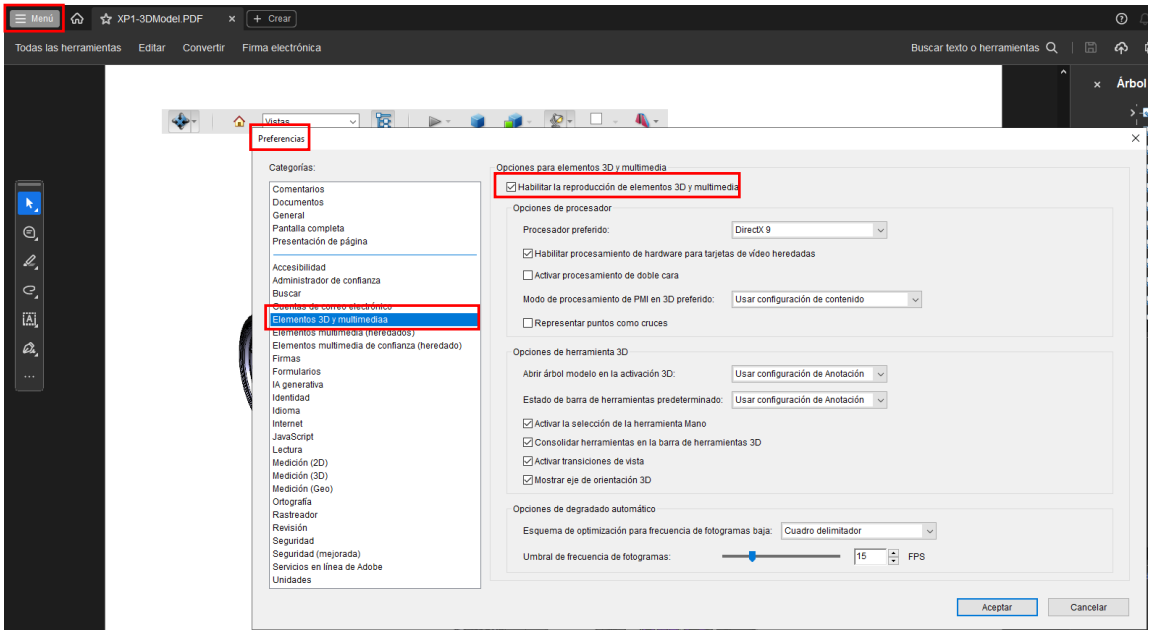

3. Use the Assembly Tree to navigate through the components and hide/show them. Use the left mouse button to rotate, Ctrl+ left mouse button to pan and right mouse button to zoom in/out.

4. The components get highlighted on the 3D view when selected on the Tree and viceversa.
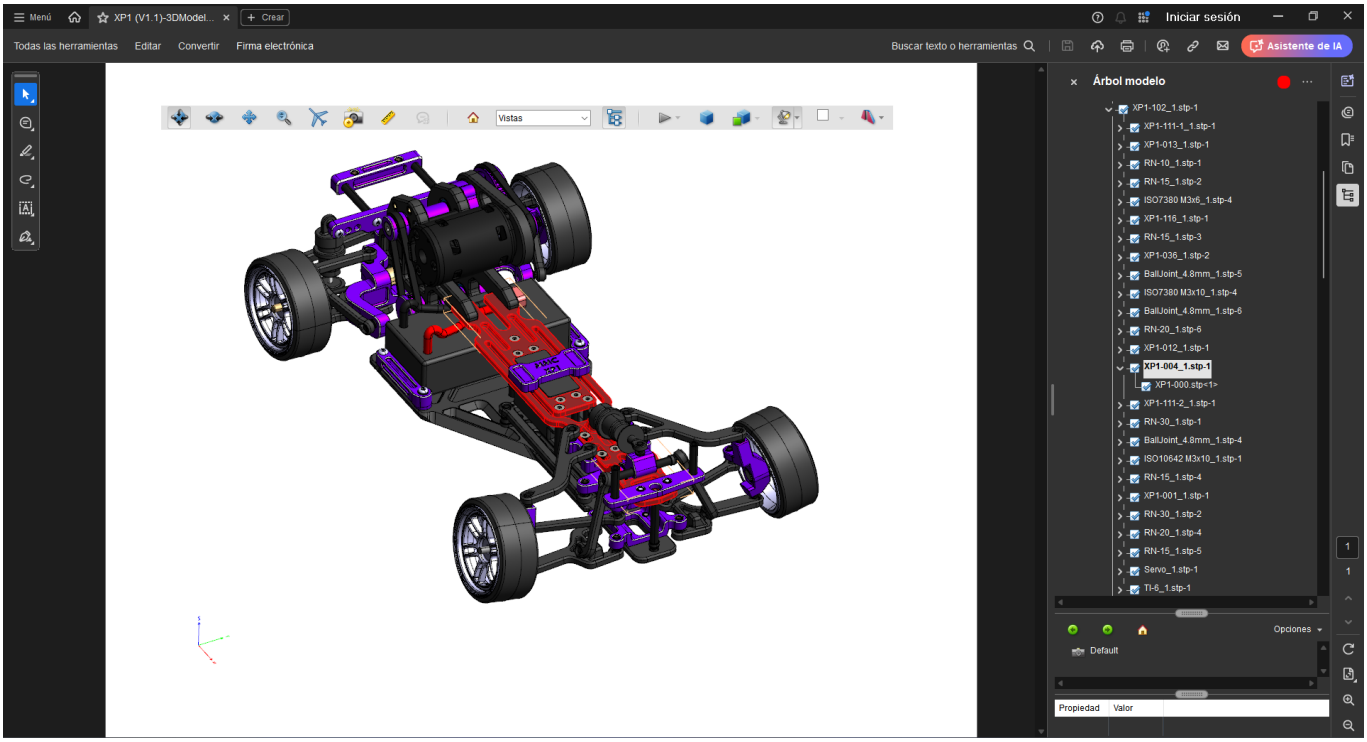
5. ENJOY!